TOP VIEW

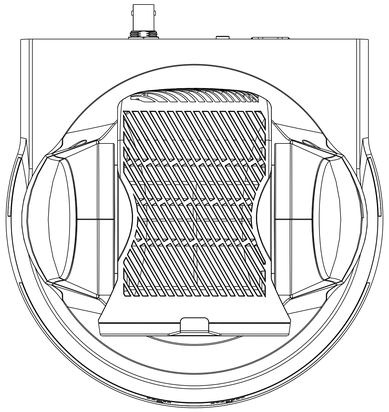

FRONT VIEW

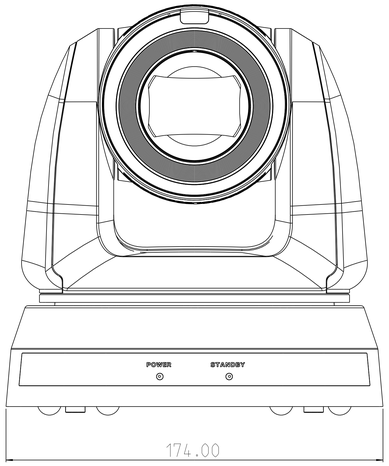

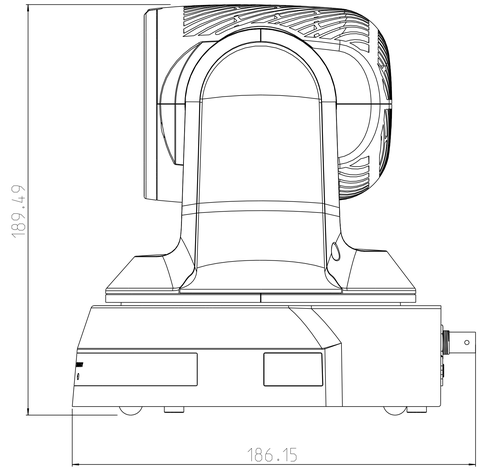

SIDE VIEW

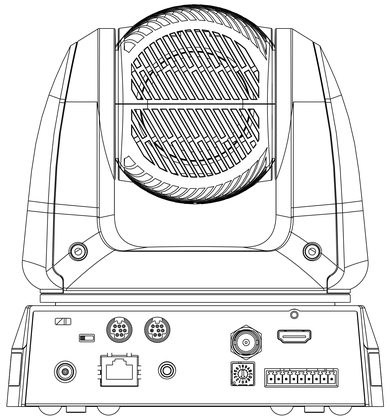

BACK VIEW
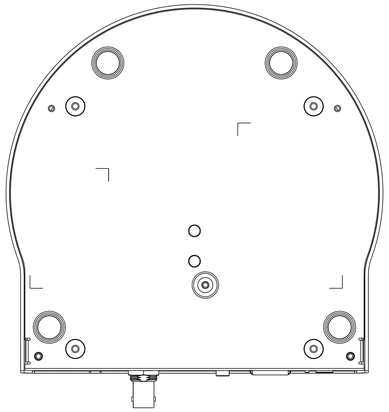
BOTTOM VIEW